LEGENDA DA FIAÇÃO

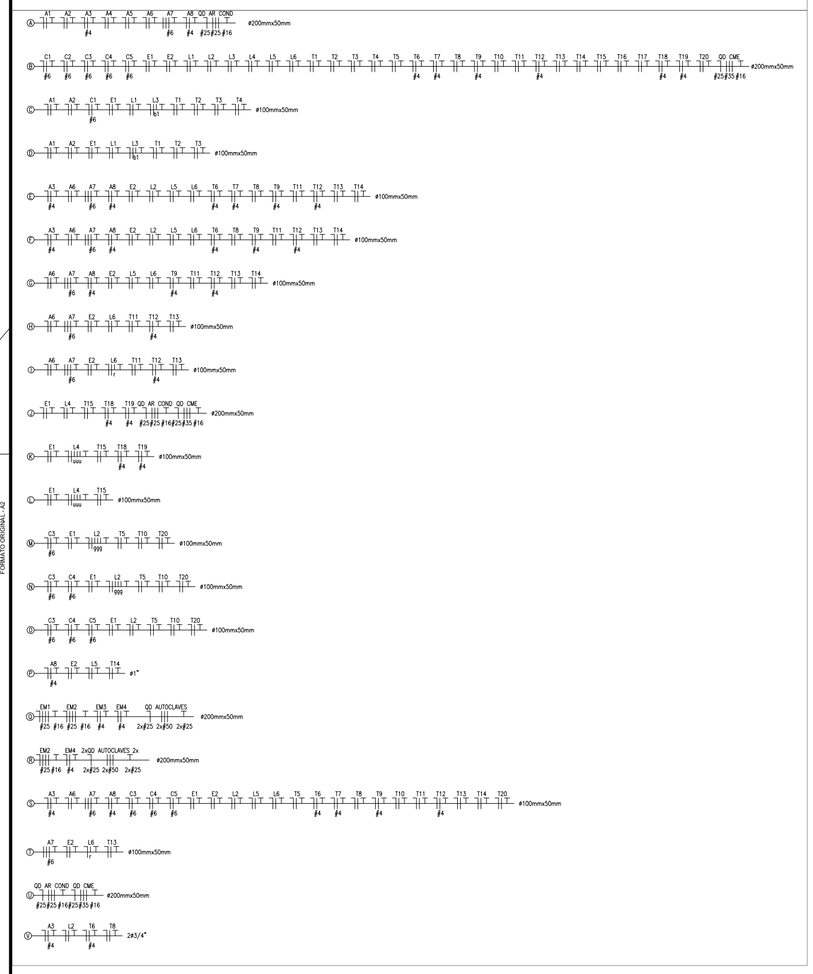

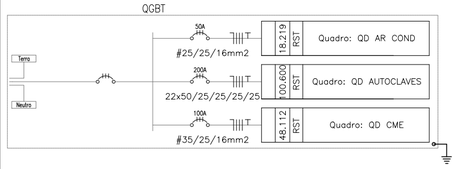

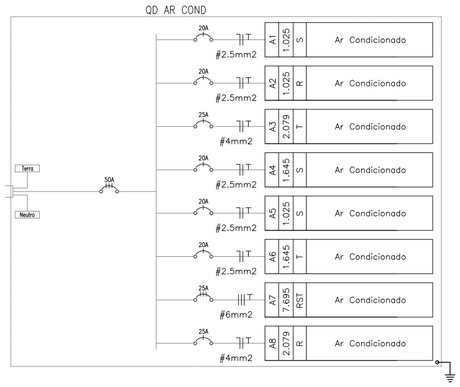

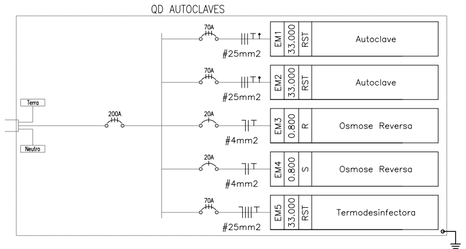

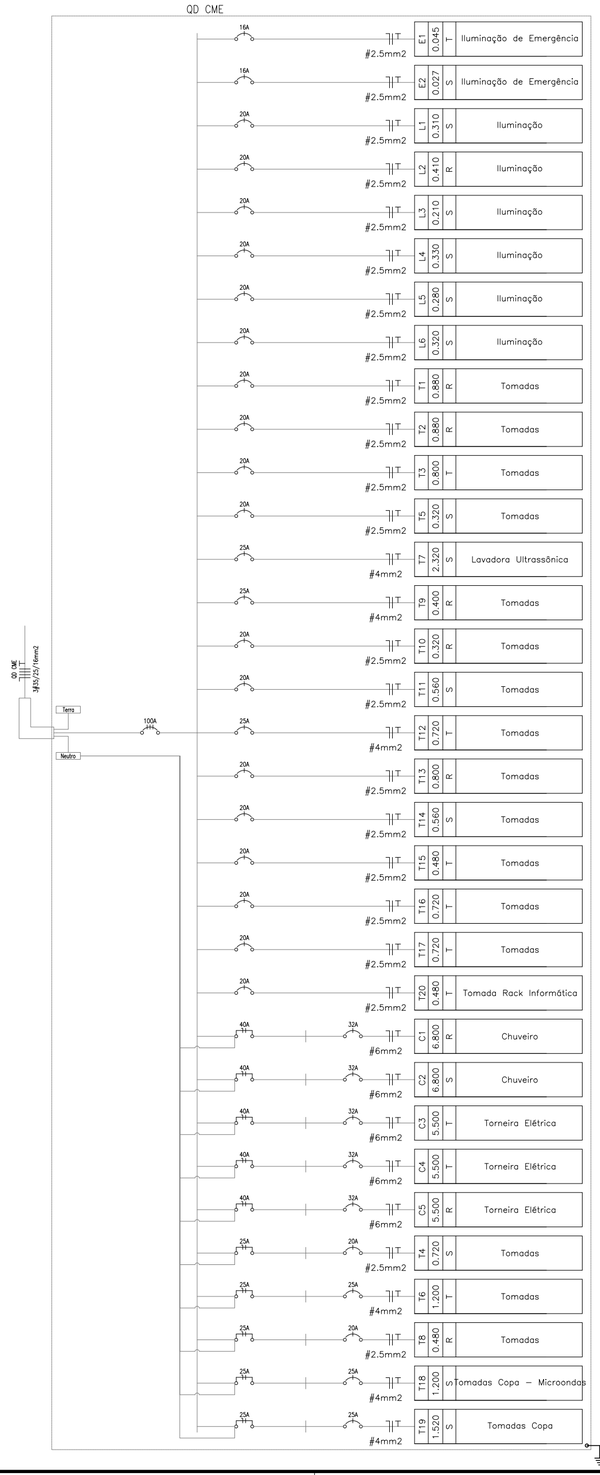

Quadro de Cargas

QD AR COND

Circ.	Descrição	Pot. W	Fat. Pot.	Pot. V.A	Fase R	Fase S	Fase T	Demanda (%)	Fases R S T	Tensão V	Corr. A	Prot. A	Cond. mm2	Q.T. (%)
A1	Ar Condicionado	1025.1	0.90	1139.0	0.0	1139.0	0.0	100%	S	220	5.18	1P–20A	2.5	0.56
A2	Ar Condicionado	1025.1	0.90	1139.0	1139.0	0.0	0.0	100%	R	220	5.18	1P–20A	2.5	0.41
A3	Ar Condicionado	2079.0	0.90	2310.0	0.0	0.0	2310.0	100%	T	220	10.50	1P–25A	4	0.59
A4	Ar Condicionado	1645.2	0.90	1828.0	0.0	1828.0	0.0	100%	S	220	8.31	1P–20A	2.5	0.43
A5	Ar Condicionado	1025.1	0.90	1139.0	0.0	1139.0	0.0	100%	S	220	5.18	1P–20A	2.5	0.29
A6	Ar Condicionado	1645.2	0.90	1828.0	0.0	0.0	1828.0	100%	T	220	8.31	1P–20A	2.5	1.1
A7	Ar Condicionado	7695.0	0.90	8550.0	2850.0	2850.0	2850.0	100%	RST	380	12.95	3P–25A	6	0.26
A8	Ar Condicionado	2079.0	0.90	2310.0	2310.0	0.0	0.0	100%	R	220	10.50	1P–25A	4	0.69
Total		18218.7		20243.0	6299.0	6956.0	6988.0							
Aliment.	C=38.59m QT=2%		0.90		6299.0	6956.0	6988.0	100%	RST	380	30.67	3P–50A	25	

Potência Demandada: 100% (18218.7 W) (20243.0 V.A)

Corrente nas Fases: R=28.6A S=31.6A T=31.8A

Quadro de Cargas

QD AUTOCLAVES

Circ.	Descrição	Pot. W	Fat. Pot.	Pot. V.A	Fase R	Fase S	Fase T	Demanda (%)	Fases R S T	Tensão V	Corr. A	Prot. A	Cond. mm2	Q.T. (%)
EM1	Autoclave	33000.0	0.80	41250.0	13750.0	13750.0	13750.0	100%	RST	380	62.50	3P–70A	25	0.2
EM2	Autoclave	33000.0	0.80	41250.0	13750.0	13750.0	13750.0	100%	RST	380	62.50	3P–70A	25	0.24
EM3	Osmose Reversa	800.0	0.80	1000.0	1000.0	0.0	0.0	100%	R	220	4.55	1P–20A	4	0.18
EM4	Osmose Reversa	800.0	0.80	1000.0	0.0	1000.0	0.0	100%	S	220	4.55	1P–20A	4	0.22
EM5	Termodesinfectora	33000.0	0.80	41250.0	13750.0	13750.0	13750.0	100%	RST	380	62.50	3P–70A	25	0.22
Total		100600.0		125750.0	42250.0	42250.0	41250.0							
Aliment.	C=32.39m QT=2%		0.80		42250.0	42250.0	41250.0	100%	RST	380	190.53	3P–200A	2x50	

Potência Demandada: 100% (100600.0 W) (125750.0 V.A)

Corrente nas Fases: R=192.0A S=192.0A T=187.5A

Quadro de Cargas

QD CME

Circ.	Descrição	Pot. W	Fat. Pot.	Pot. V.A	Fase R	Fase S	Fase T	Demanda (%)	Fases R S T	Tensão V	Corr. A	Prot. A	Cond. mm2	Q.T. (%)
C1	Chuveiro	6800.0	1.00	6800.0	6800.0	0.0	0.0	100%	R	220	30.91	1P–32A	6	0.6
C2	Chuveiro	6800.0	1.00	6800.0	0.0	6800.0	0.0	100%	S	220	30.91	1P–32A	6	0.49
C3	Torneira Elétrica	5500.0	1.00	5500.0	0.0	0.0	5500.0	100%	T	220	25.00	1P–32A	6	0.74
C4	Torneira Elétrica	5500.0	1.00	5500.0	0.0	0.0	5500.0	100%	T	220	25.00	1P–32A	6	0.66
C5	Torneira Elétrica	5500.0	1.00	5500.0	5500.0	0.0	0.0	100%	R	220	25.00	1P–32A	6	0.56
E1	Iluminação de Emergência	45.0	0.90	50.0	0.0	0.0	50.0	100%	T	220	0.23	1P–16A	2.5	0.02
E2	Iluminação de Emergência	27.0	0.90	30.0	0.0	30.0	0.0	100%	S	220	0.14	1P–16A	2.5	0.01
L1	Iluminação	310.0	0.90	344.4	0.0	344.4	0.0	100%	S	220	1.57	1P–20A	2.5	0.16
L2	Iluminação	410.0	0.90	455.6	455.6	0.0	0.0	100%	R	220	2.07	1P–20A	2.5	0.27
L3	Iluminação	210.0	0.90	233.3	0.0	233.3	0.0	100%	S	220	1.06	1P–20A	2.5	0.05
L4	Iluminação	330.0	0.90	366.7	0.0	366.7	0.0	100%	S	220	1.67	1P–20A	2.5	0.14
L5	Iluminação	280.0	0.90	311.1	0.0	311.1	0.0	100%	S	220	1.41	1P–20A	2.5	0.11
L6	Iluminação	320.0	0.90	355.6	0.0	355.6	0.0	100%	S	220	1.62	1P–20A	2.5	0.15
T1	Tomadas	880.0	0.80	1100.0	1100.0	0.0	0.0	100%	R	220	5.00	1P–20A	2.5	0.6
T2	Tomadas	880.0	0.80	1100.0	1100.0	0.0	0.0	100%	R	220	5.00	1P–20A	2.5	0.47
T3	Tomadas	800.0	0.80	1000.0	0.0	0.0	1000.0	100%	T	220	4.55	1P–20A	2.5	0.38
T4	Tomadas	720.0	0.80	900.0	0.0	900.0	0.0	100%	S	220	4.09	1P–20A	2.5	0.3
T5	Tomadas	320.0	0.80	400.0	0.0	400.0	0.0	100%	S	220	1.82	1P–20A	2.5	0.12
T6	Tomadas	1200.0	0.80	1500.0	0.0	0.0	1500.0	100%	T	220	6.82	1P–25A	4	0.41
T7	Lavadora Ultrassônica	2320.0	0.80	2900.0	0.0	2900.0	0.0	100%	S	220	13.18	1P–25A	4	0.45
T8	Tomadas	480.0	0.80	600.0	600.0	0.0	0.0	100%	R	220	2.73	1P–20A	2.5	0.22
T9	Tomadas	400.0	0.80	500.0	500.0	0.0	0.0	100%	R	220	2.27	1P–25A	4	0.14
T10	Tomadas	320.0	0.80	400.0	400.0	0.0	0.0	100%	R	220	1.82	1P–20A	2.5	0.21
T11	Tomadas	560.0	0.80	700.0	0.0	700.0	0.0	100%	S	220	3.18	1P–20A	2.5	0.48
T12	Tomadas	720.0	0.80	900.0	0.0	0.0	900.0	100%	T	220	4.09	1P–25A	4	0.38
T13	Tomadas	800.0	0.80	1000.0	1000.0	0.0	0.0	100%	R	220	4.55	1P–20A	2.5	0.56
T14	Tomadas	560.0	0.80	700.0	0.0	700.0	0.0	100%	S	220	3.18	1P–20A	2.5	0.37
T15	Tomadas	480.0	0.80	600.0	0.0	0.0	600.0	100%	T	220	2.73	1P–20A	2.5	0.2
T16	Tomadas	720.0	0.80	900.0	0.0	0.0	900.0	100%	T	220	4.09	1P–20A	2.5	0.27
T17	Tomadas	720.0	0.80	900.0	0.0	0.0	900.0	100%	T	220	4.09	1P–20A	2.5	0.3
T18	Tomadas Copa – Microondas	1200.0	0.80	1500.0	0.0	1500.0	0.0	100%	S	220	6.82	1P–25A	4	0.31
T19	Tomadas Copa	1520.0	0.80	1900.0	0.0	1900.0	0.0	100%	S	220	8.64	1P–25A	4	0.41
T20	Tomada Rack Informática	480.0	0.80	600.0	0.0	0.0	600.0	100%	T	220	2.73	1P–20A	2.5	0.33
Total		48112.0		52346.7	17455.6	17441.1	17450.0							
Aliment.	C=38.59m QT=2%		0.92		17455.6	17441.1	17450.0	100%	RST	380	79.31	3P–100A	35	

Potência Demandada: 100% (48112.0 W) (52346.7 V.A)

Corrente nas Fases: R=79.3A S=79.3A T=79.3A

REV.	DESCRIÇÃO	DATA	PROJETISTA
00	EMISSÃO INICIAL	07/2022	A.R.CORRALES

FUNDAÇÃO HOSPITALAR GETÚLIO VARGAS
UNIDADE: Hospital Municipal Getúlio Vargas
ENDEREÇO: R. Pinheiro Machado, 331 - Dihel - Sapucaia do Sul - RS
FONE: (51) 3451.8200 R.115

DIRETOR GERAL:
TÉRCIO ERANY TEDESCO JÚNIOR

RESPONSÁVEL TÉCNICO:
PEDRO JOSÉ DORNELES MÜLLER
ENG. CIVIL - CREA/RS 169.093

CONTEÚDO:
PROJETO DE INSTALAÇÕES ELÉTRICAS
DIAGRAMAS, QUADROS DE CARGA E LEGENDA
CENTRAL DE MATERIAL ESTERILIZADO
REFORMA

DESENHO: A.R.CORRALES
ESCALA (m): INDICADA
ÁREA (m²): -
PRANCHA: IE01

FORMATO ORIGINAL - A2

CME-ELÉTRICA_V3_FINAL